C.I.P.	7 mm Rem. Ultra Mag.	TAB.	I
		Date	02-01-22
	Country of Origin: US	Revision	02-05-15

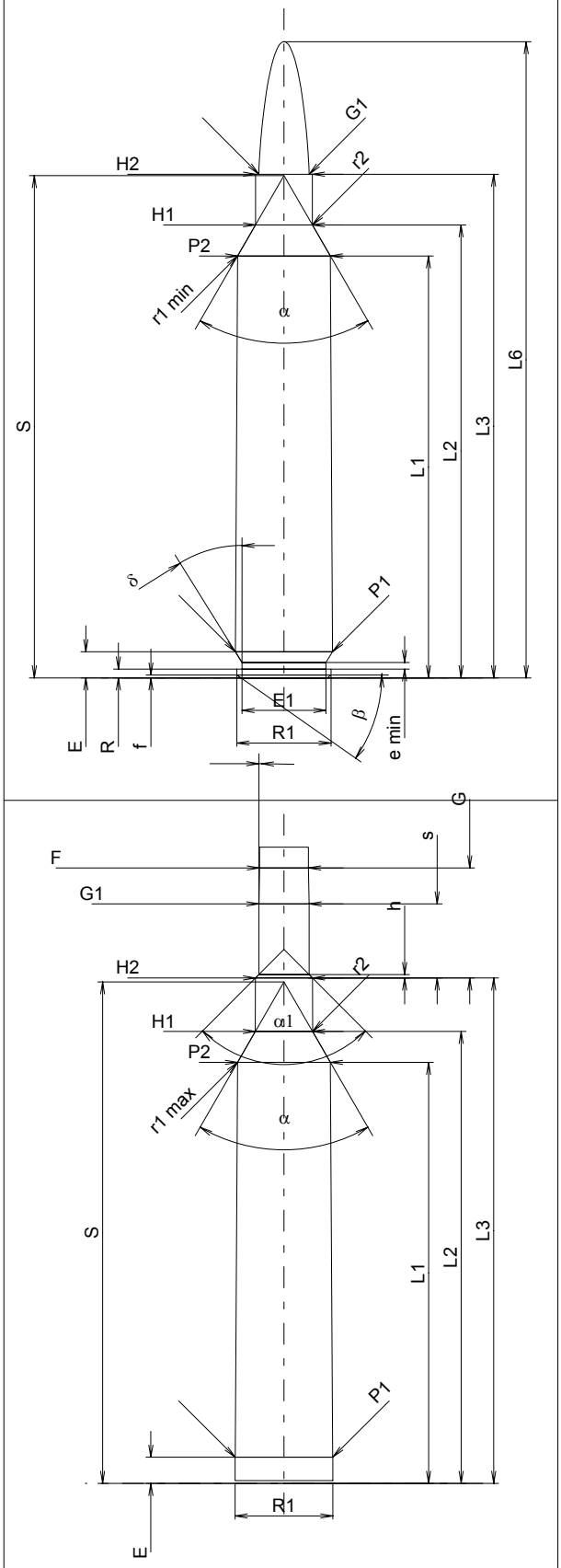

Scale 1:1

CARTRIDGE MAXI

Lengths

L1 1)	=	60.64	-0.20
L2 1)	=	65.10	-0.20
L3 1)	=	72.39	
L4	=		
L5	=		
L6	=	91.44	

Case Head

R	=	1.27
R1	=	13.56
R3	=	
E	=	3.75
E1	=	12.07
e min	=	0.94
δ	=	32°
f	=	0.41
β	=	35°

Powder Chamber

P1	=	13.99	
P2 1)*	=	13.33	-0.20

Junction Cone

α *	=	60°
S *	=	72.18
r1 min	=	0.76
r2	=	3.18

Collar

H1 *	=	8.18
H2 1)	=	8.18

Projectile

G1 1)	=	7.23
G2	=	
F	=	
L3+G 1)	=	88.20

Pressures (Energies)
Method Transducer

Pmax	=	4400	bar
PK	=	5060	bar
PE	=	5500	bar
M	=	25.00	
EE	=	5250	Joule

Miscellaneous Dimensions

Fe 1)	=	0.10
delta L	=	

CHAMBER MINI

Lengths

L1	=	60.51
L2	=	64.96
L3 1)	=	72.64

Breech

R	=	
R1	=	14.05
R2	=	
R3	=	
r	=	

Powder Chamber

E	=	3.75
P1 1)	=	14.02
P2 *	=	13.36

Junction Cone

α 1)*	=	60°
S *	=	72.08
r1 max	=	0.76
r2	=	3.18

Collar

H1 *	=	8.23
H2 1)	=	8.20

Commencement of Rifling

G1 1)*	=	7.23
G 1)	=	15.81
α1	=	90°
h	=	0.49
s *	=	10.65
i 1)*	=	1°
w	=	

Barrel

F 1)*	=	7.04
Z 1)	=	7.21

Grooves

b	=	2.79	
N	=	6	
u	=	241.30	
Q	=	40.34	mm²

Dimensions in << mm >>
Dimensions and Tolerances for Proof Barrels
see Appendix CR 1.

Notes: 1) Check for safety reasons
* Basic dimensions