C.I.P.	5,6 x 39 Country of Origin: RU	TAB.	I
		Date	00-02-15
		Revision	07-05-14

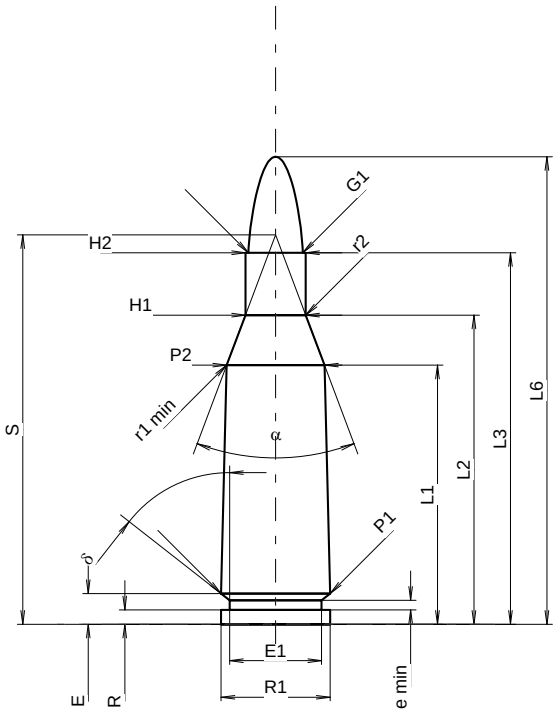

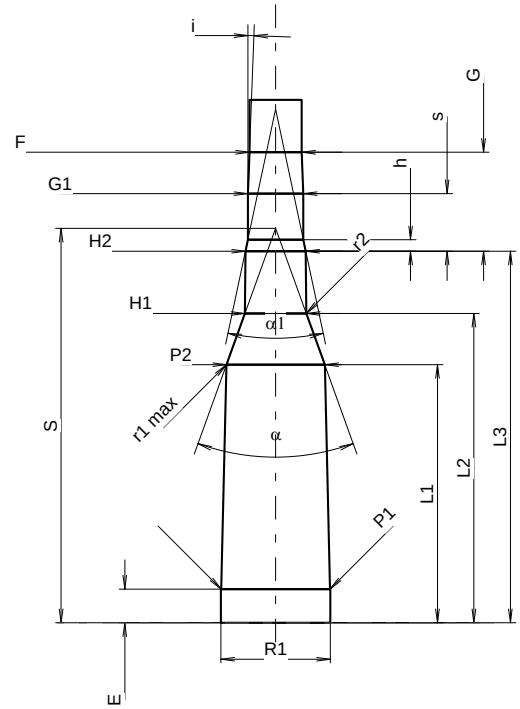

Scale 1.27:1

CARTRIDGE MAXI

Lengths

L1 1)*	=	27.00	-0.20
L2 1)*	=	32.20	-0.20
L3 1)	=	38.70	
L4	=		
L5	=		
L6	=	48.70	

Case Head

R	=	1.50
R1	=	11.35
R3	=	
E	=	3.20
E1	=	9.56
e min	=	1.00
δ	=	51°58'13"
f	=	
β	=	

Powder Chamber

P1	=	11.35	
P2 1)*	=	10.20	-0.20

Junction Cone

α	=	41°12'31"
S	=	40.57
r1 min	=	0.50
r2	=	2.00

Collar

H1 *	=	6.29
H2 1)	=	6.29

Projectile

G1 1)	=	5.67
G2	=	
F	=	
L3+G 1)	=	49.01

Pressures (Energies)
Method Transducer

Pmax	=	3500	bar
PK	=	4025	bar
PE	=	4375	bar
M	=	17.50	
EE	=	2100	Joule

Miscellaneous Dimensions

Fe 1)3)	=	0.15
delta L	=	0.06

CHAMBER MINI

Lengths

L1 *	=	26.88
L2 *	=	32.22
L3 1)	=	38.70

Breech

R	=	1.50
R1	=	11.40
R2	=	
R3	=	
r	=	

Powder Chamber

E	=	3.50
P1 1)	=	11.34
P2 *	=	10.24

Junction Cone

α 1)	=	39°38'50"
S	=	41.08
r1 max	=	0.50
r2	=	2.50

Collar

H1 *	=	6.39
H2 1)	=	6.29

Commencement of Rifling

G1 1)*	=	5.78
G 1)*	=	10.31
α1	=	23°59'38"
h	=	1.20
s *	=	6.00
i 1)	=	2°11'33"
w	=	

Barrel

F 1)*	=	5.45
Z 1)	=	5.59

Grooves

b	=	2.00	
N	=	6	
u	=	420.00	
Q	=	24.19	mm²

Dimensions in << mm >>
Dimensions and Tolerances for Proof Barrels
see Appendix CR 1.

Notes:
1) Check for safety reasons
3) Headspace on Shoulder
* Basic dimensions