C.I.P.	505 Mag. Gibbs Country of Origin: GB	TAB.	I
		Date	84-06-14
		Revision	02-05-15

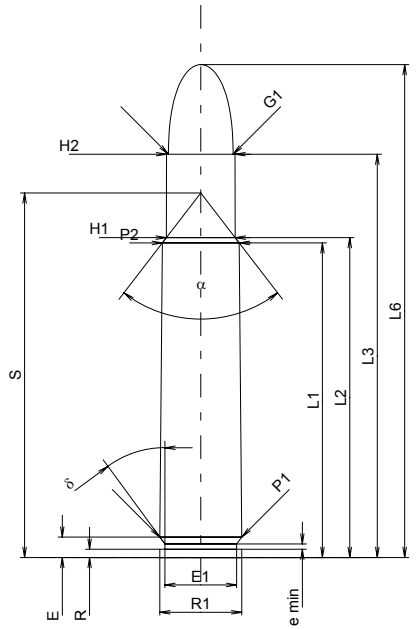

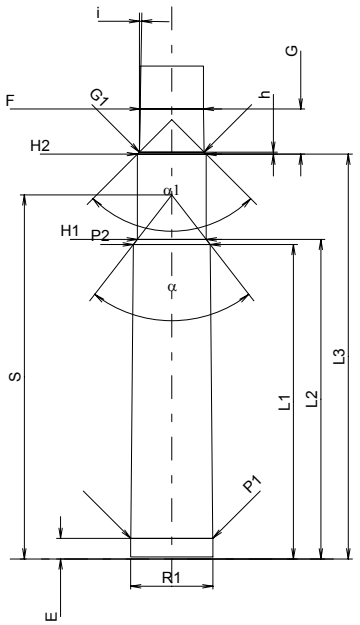

Scale 1:1.5

CARTRIDGE MAXI

Lengths

L1 1)*	=	62.43	-0.20
L2 1)*	=	63.45	-0.20
L3 1)	=	80.01	
L4	=		
L5	=		
L6	=	97.79	

Case Head

R	=	1.65
R1	=	16.26
R3	=	
E	=	4.06
E1	=	14.22
e min	=	1.02
δ	=	36°18'36"
f	=	
β	=	

Powder Chamber

P1	=	16.26	
P2 1)*	=	15.24	-0.20

Junction Cone

α	=	75°09'51"
S	=	72.33
r1 min	=	
r2	=	

Collar

H1 *	=	13.67
H2 1)	=	13.59

Projectile

G1 1)	=	12.83
G2	=	
F	=	
L3+G 1)	=	88.98

Pressures (Energies)
Method Transducer

Pmax	=	2700	bar
PK	=	3105	bar
PE	=	3375	bar
M	=	25.00	
EE	=	7040	Joule

Miscellaneous Dimensions

Fe 1)	=	0.15
delta L	=	

CHAMBER MINI

Lengths

L1 *	=	62.38
L2 *	=	63.40
L3 1)	=	80.31

Breech

R	=	1.65
R1	=	16.31
R2	=	
R3	=	
r	=	

Powder Chamber

E	=	4.06
P1 1)	=	16.28
P2 *	=	15.27

Junction Cone

α 1)	=	75°30'57"
S	=	72.24
r1 max	=	
r2	=	

Collar

H1 *	=	13.69
H2 1)	=	13.61

Commencement of Rifling

G1 1)*	=	12.85
G 1)*	=	8.97
α1	=	90°
h *	=	0.38
s	=	
i 1)	=	1°00'11"
w	=	

Barrel

F 1)*	=	12.55
Z 1)	=	12.80

Grooves

b	=	5.33	
N	=	5	
u	=	406.00	
Q	=	127.14	mm²

Dimensions in << mm >>
Dimensions and Tolerances for Proof Barrels
see Appendix CR 1.

Notes: 1) Check for safety reasons
* Basic dimensions

Reproduction forbidden as well as in the form of extracts without approval of C.I.P.