| C.I.P. | 280 Riml. N. E. Ross<br>Country of Origin: GB | TAB. | I |
|---|---|---|---|
| | | Date | 84-06-14 |
| | | Revision | 02-05-15 |

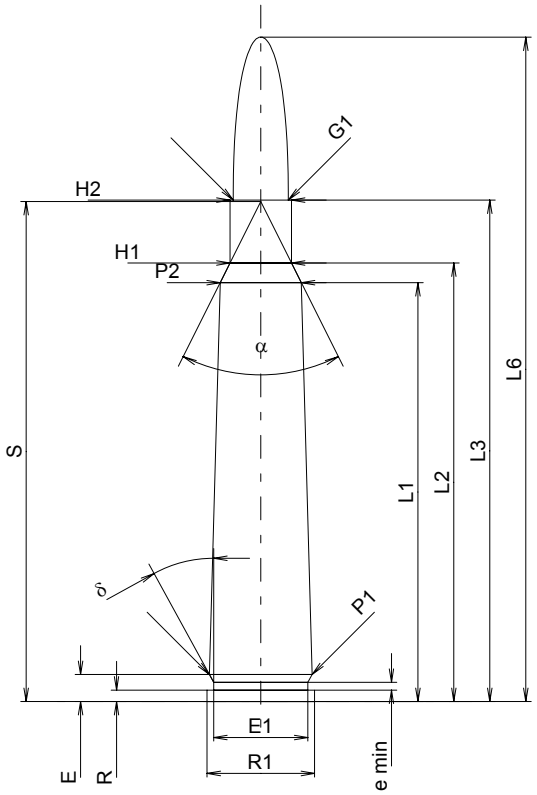


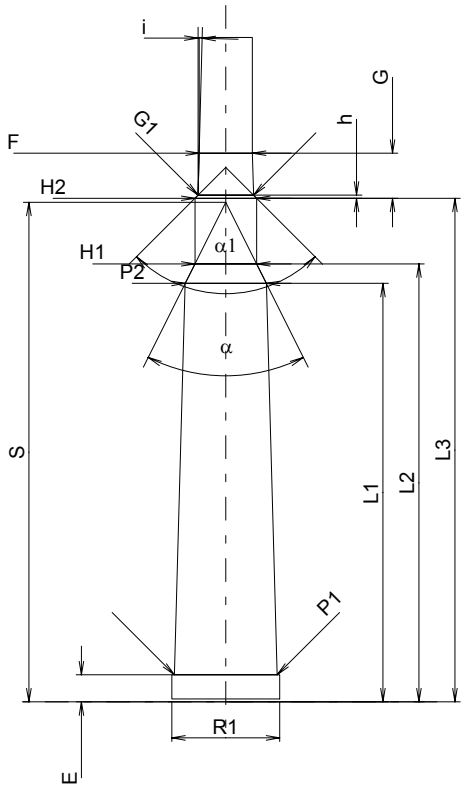


Scale 1:1

## CARTRIDGE MAXI

**Lengths**

| | | | |
|---|---|---|---|
| L1 1)* | = | 55.40 | -0.20 |
| L2 1)* | = | 57.99 | -0.20 |
| L3 1) | = | 66.32 | |
| L4 | = | | |
| L5 | = | | |
| L6 | = | 87.88 | |

**Case Head**

| | | |
|---|---|---|
| R | = | 1.52 |
| R1 | = | 14.22 |
| R3 | = | |
| E | = | 3.58 |
| E1 | = | 12.45 |
| e min | = | 1.02 |
| δ | = | 28°43'48" |
| f | = | |
| β | = | |

**Powder Chamber**

| | | | |
|---|---|---|---|
| P1 | = | 13.59 | |
| P2 1)* | = | 10.72 | -0.20 |

**Junction Cone**

| | | |
|---|---|---|
| α | = | 53°07'48" |
| S | = | 66.12 |
| r1 min | = | |
| r2 | = | |

**Collar**

| | | |
|---|---|---|
| H1 * | = | 8.13 |
| H2 1) | = | 8.13 |

**Projectile**

| | | |
|---|---|---|
| G1 1) | = | 7.29 |
| G2 | = | |
| F | = | |
| L3+G 1) | = | 72.27 |

**Pressures (Energies)**
**Method Transducer**

| | | | |
|---|---|---|---|
| Pmax | = | 3250 | bar |
| PK | = | 3738 | bar |
| PE | = | 4060 | bar |
| M | = | 25.00 | |
| EE | = | 4440 | Joule |

**Miscellaneous Dimensions**

| | | |
|---|---|---|
| Fe 1) | = | 0.15 |
| delta L | = | |

## CHAMBER MINI

**Lengths**

| | | |
|---|---|---|
| L1 * | = | 55.35 |
| L2 * | = | 57.94 |
| L3 1) | = | 66.62 |

**Breech**

| | | |
|---|---|---|
| R | = | 1.52 |
| R1 | = | 14.27 |
| R2 | = | |
| R3 | = | |
| r | = | |

**Powder Chamber**

| | | |
|---|---|---|
| E | = | 3.58 |
| P1 1) | = | 13.61 |
| P2 * | = | 10.74 |

**Junction Cone**

| | | |
|---|---|---|
| α 1) | = | 53°07'48" |
| S | = | 66.09 |
| r1 max | = | |
| r2 | = | |

**Collar**

| | | |
|---|---|---|
| H1 * | = | 8.15 |
| H2 1) | = | 8.15 |

**Commencement of Rifling**

| | | |
|---|---|---|
| G1 1)* | = | 7.34 |
| G 1)* | = | 5.95 |
| α1 | = | 90° |
| h * | = | 0.41 |
| s | = | |
| i 1) | = | 1°29'57" |
| w | = | |

**Barrel**

| | | |
|---|---|---|
| F 1)* | = | 7.05 |
| Z 1) | = | 7.30 |

**Grooves**

| | | | |
|---|---|---|---|
| b | = | | |
| N | = | | |
| u | = | 220.00 | |
| Q | = | 39.04 | mm² |

Dimensions in << mm >>
Dimensions and Tolerances for Proof Barrels
see Appendix CR 1.

Notes: 1) Check for safety reasons
* Basic dimensions