C.I.P.	275 H. V. Rigby Country of Origin: GB	TAB.	I
		Date	84-06-14
		Revision	02-05-15

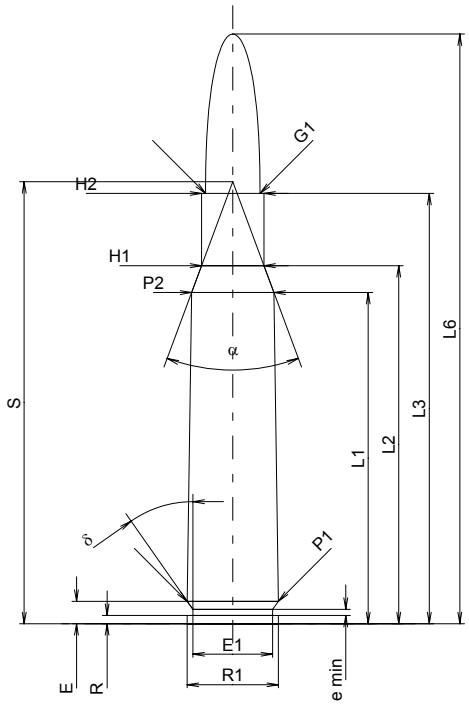

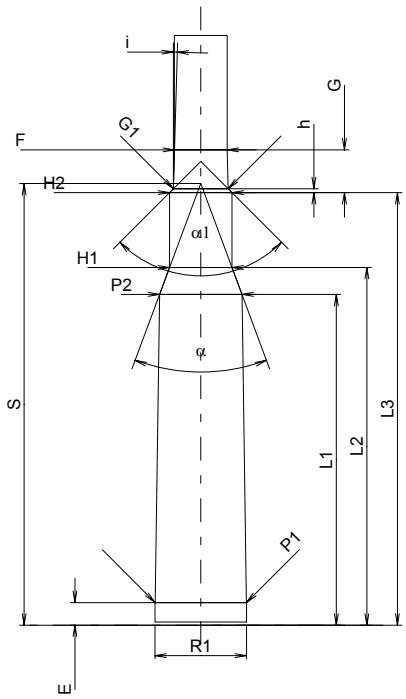

Scale 1:1

CARTRIDGE MAXI

Lengths

L1 1)*	=	43.79	-0.20
L2 1)*	=	47.35	-0.20
L3 1)	=	56.90	
L4	=		
L5	=		
L6	=	77.98	

Case Head

R	=	1.09
R1	=	12.06
R3	=	
E	=	2.97
E1	=	10.54
e min	=	0.81
δ	=	35°01'48"
f	=	
β	=	

Powder Chamber

P1	=	12.04	
P2 1)*	=	10.87	-0.20

Junction Cone

α	=	40°41'17"
S	=	58.45
r1 min	=	
r2	=	

Collar

H1 *	=	8.23
H2 1)	=	8.23

Projectile

G1 1)	=	7.21
G2	=	
F	=	
L3+G 1)	=	62.55

Pressures (Energies)
Method Transducer

Pmax	=	3200	bar
PK	=	3680	bar
PE	=	4000	bar
M	=	25.00	
EE	=	2720	Joule

Miscellaneous Dimensions

Fe 1)	=	0.15
delta L	=	

CHAMBER MINI

Lengths

L1 *	=	43.74
L2 *	=	47.29
L3 1)	=	57.20

Breech

R	=	1.09
R1	=	12.12
R2	=	
R3	=	
r	=	

Powder Chamber

E	=	2.97
P1 1)	=	12.07
P2 *	=	10.90

Junction Cone

α 1)	=	40°47'34"
S	=	58.40
r1 max	=	
r2	=	

Collar

H1 *	=	8.26
H2 1)	=	8.26

Commencement of Rifling

G1 1)*	=	7.26
G 1)*	=	5.65
α1	=	90°
h *	=	0.50
s	=	
i 1)	=	1°36'46"
w	=	

Barrel

F 1)*	=	6.97
Z 1)	=	7.25

Grooves

b	=	3.62	
N	=	4	
u	=	203.00	
Q	=	40.28	mm²

Dimensions in << mm >>
Dimensions and Tolerances for Proof Barrels
see Appendix CR 1.

Notes: 1) Check for safety reasons
* Basic dimensions