C.I.P.	8 x 60 Country of Origin: DE	TAB.	I
		Date	84-06-13
		Revision	11-05-25

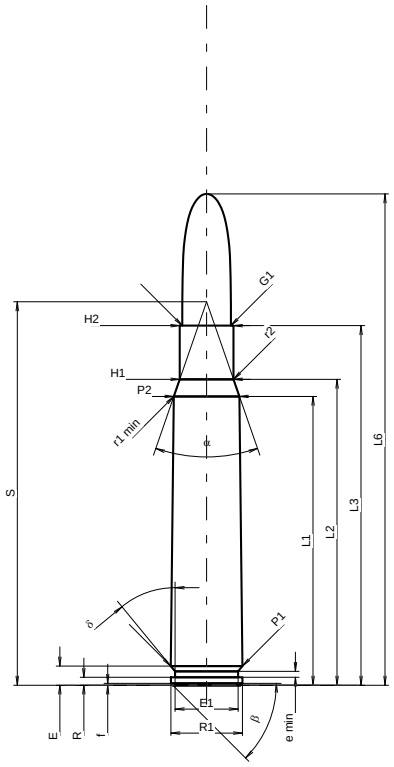

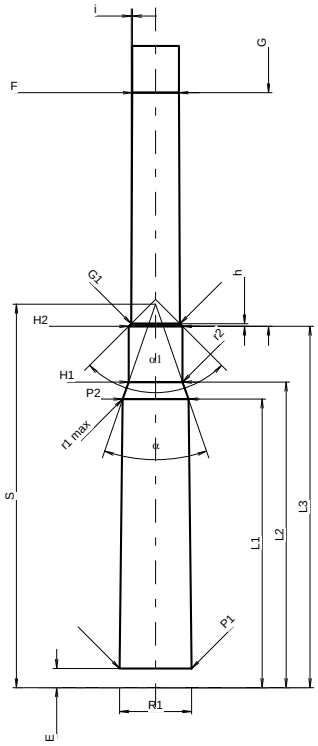

Scale 1:1.26

CARTRIDGE MAXI

Lengths

L1 *1)**	=	48.20	-0.20
L2 *1)**	=	51.04	-0.20
L3 *1)*	=	60.00	
L4	=		
L5	=		
L6	=	82.00	

Case Head

R	=	1.30
R1	=	11.95
R3	=	
E	=	3.20
E1	=	10.50
e min	=	1.00
δ	=	39°25'12"
f	=	0.30
β	=	45°

Powder Chamber

P1	=	11.98	
P2 *1)**	=	10.95	-0.20

Junction Cone

α	=	38°15'22"
S	=	63.99
r1 min	=	0.50
r2	=	0.50

Collar

H1 *	=	8.98
H2 *1)*	=	8.98

Projectile

G1 *1)*	=	8.09
G2	=	
F	=	
L3+G *1)*	=	99.00

Pressures (Energies)
Method Transducer

Pmax	=	4050	bar
PK	=	4658	bar
PE	=	5060	bar
M	=	25.00	
EE	=	3900	Joule

Miscellaneous Dimensions

Fe *1)3)*	=	0.10
delta L	=	

CHAMBER MINI

Lengths

L1 *	=	48.16
L2 *	=	51.00
L3 *1)*	=	60.30

Breech

R	=	1.30
R1	=	12.00
R2	=	
R3	=	
r	=	

Powder Chamber

E	=	3.20
P1 *1)*	=	12.01
P2 *	=	10.98

Junction Cone

α *1)*	=	38°15'22"
S	=	63.99
r1 max	=	0.50
r2	=	0.50

Collar

H1 *	=	9.01
H2 *1)*	=	9.00

Commencement of Rifling

G1 *1)**	=	8.12
G *1)**	=	39.00
α1	=	90°
h *	=	0.44
s	=	
i *1)*	=	0°14'16"
w	=	

Barrel

F *1)**	=	7.80
Z *1)*	=	8.07

Grooves

b	=	4.40	
N	=	4	
u	=	240.00	
Q	=	50.30	mm²

Dimensions in << mm >>
Dimensions and Tolerances for Proof Barrels
see Appendix CR 1.

Notes:
1) Check for safety reasons
3) Headspace on Shoulder
* Basic dimensions