C.I.P.	8,5 mm Messner Mag. Country of Origin: FR	TAB. I Date 13-05-22 Revision

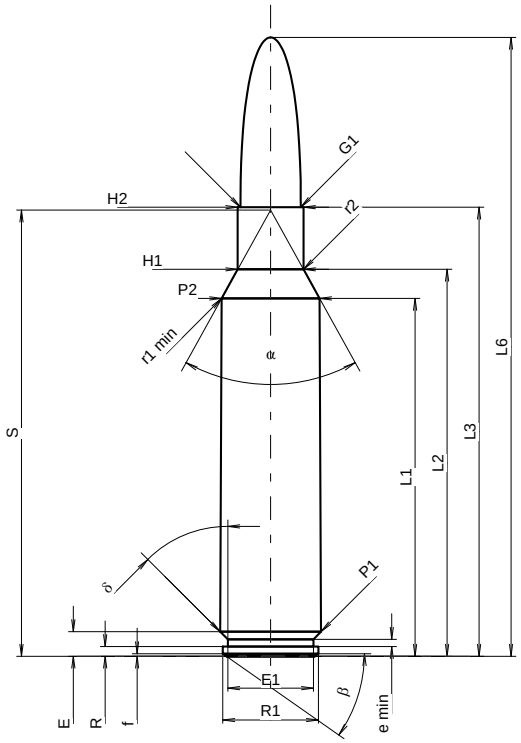

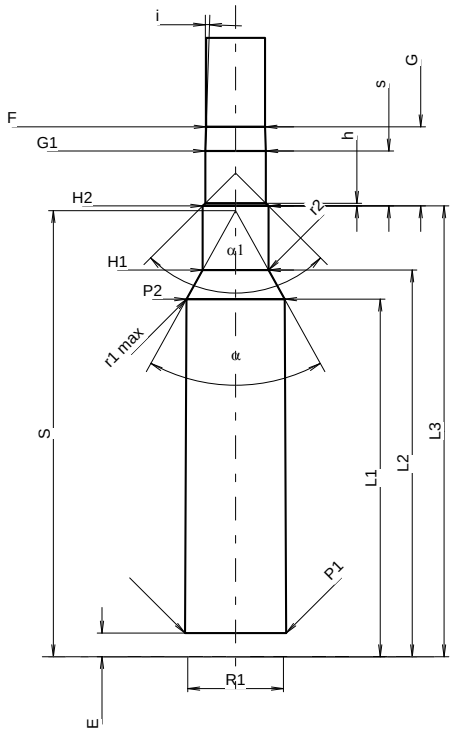

Scale 1:1.07

CARTRIDGE MAXI

Lengths

L1 1)	=	50.88	-0.20
L2 1)	=	55.01	-0.20
L3 1)	=	63.85	
L4	=		
L5	=		
L6	=	88.00	

Case Head

R	=	1.38
R1	=	13.60
R3	=	
E	=	3.48
E1	=	12.19
e min	=	1.02
δ	=	45°
f	=	0.36
β	=	35°

Powder Chamber

P1	=	14.35	
P2 1)*	=	13.93	-0.20

Junction Cone

α *	=	58°
S *	=	63.44
r1 min	=	0.66
r2	=	1.85

Collar

H1 *	=	9.35
H2 1)	=	9.35

Projectile

G1 1)	=	8.59
G2	=	
F	=	
L3+G 1)	=	75.10

Pressures (Energies)
Method Transducer

Pmax	=	4400	bar
PK	=	5060	bar
PE	=	5500	bar
M	=	25.00	
EE	=	6400	Joule

Miscellaneous Dimensions

Fe 1)3)	=	0.10
delta L	=	

CHAMBER MINI

Lengths

L1	=	50.85
L2	=	54.98
L3 1)	=	64.10

Breech

R	=	1.38
R1	=	13.62
R2	=	
R3	=	
r	=	

Powder Chamber

E	=	3.35
P1 1)	=	14.38
P2 *	=	13.96

Junction Cone

α 1)*	=	58°
S *	=	63.44
r1 max	=	0.55
r2	=	2.22

Collar

H1 *	=	9.38
H2 1)	=	9.38

Commencement of Rifling

G1 1)	=	8.61
G 1)*	=	11.25
α1	=	90°
h	=	0.39
s *	=	7.81
i 1)*	=	1°54'53"
w	=	

Barrel

F 1)*	=	8.38
Z 1)	=	8.59

Grooves

b	=	2.79	
N	=	6	
u	=	254.00	
Q	=	56.95	mm²

Dimensions in << mm >>
Dimensions and Tolerances for Proof Barrels
see Appendix CR 1.

Notes:
1) Check for safety reasons
3) Headspace on Shoulder
* Basic dimensions