C.I.P.

7 x 44 Penna

Country of Origin: IT

TAB.	I
Date	13-05-22
Revision	

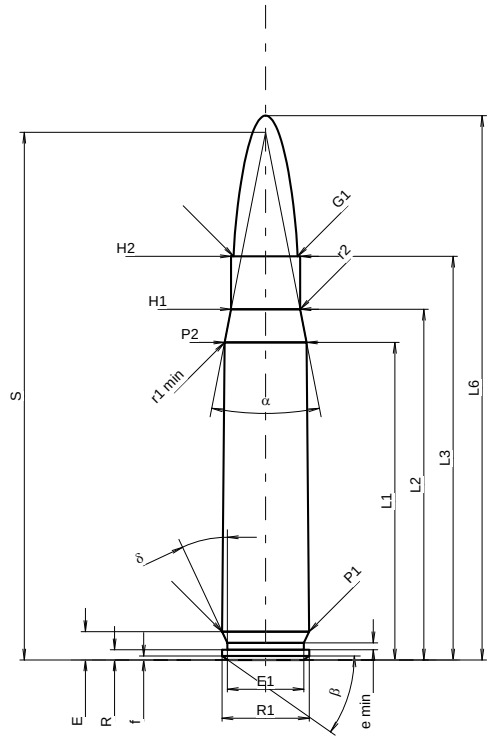

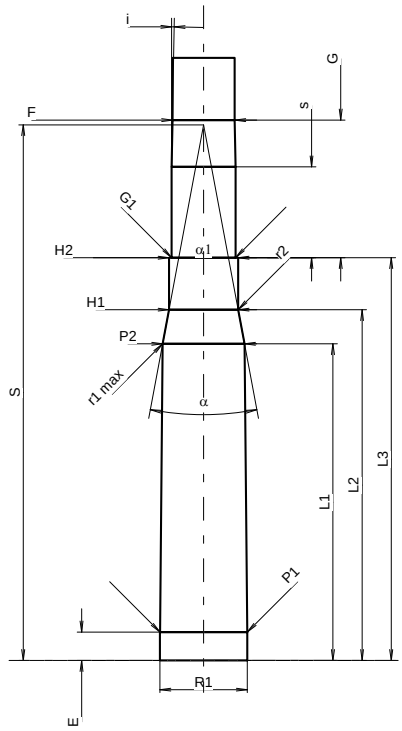

Scale 1.2:1

CARTRIDGE MAXI

Lengths

L1 *1)*	=	35.00	-0.20
L2 *1)*	=	38.67	-0.20
L3 *1)*	=	44.50	
L4	=		
L5	=		
L6	=	60.00	

Case Head

R	=	1.14	
R1	=	9.60	
R3	=		
E	=	3.13	
E1	=	8.43	
e min	=	0.76	
δ	=	25°	
f	=	0.45	
β	=	35°	

Powder Chamber

P1	=	9.58	
P2 *1)**	=	9.03	-0.20

Junction Cone

α *	=	22°02'56"
S *	=	58.17
r1 min	=	0.60
r2	=	2.50

Collar

H1 *	=	7.60
H2 *1)*	=	7.60

Projectile

G1 *1)*	=	7.04
G2	=	
F	=	
L3+G *1)*	=	59.66

Pressures (Energies)
Method Transducer

Pmax	=	4400	bar
PK	=	5060	bar
PE	=	5500	bar
M	=	25.00	
EE	=	2000	Joule

Miscellaneous Dimensions

Fe *1)3)*	=	0.10
delta L	=	0.10

CHAMBER MINI

Lengths

L1	=	34.90
L2	=	38.67
L3 *1)*	=	44.40

Breech

R	=	
R1	=	9.63
R2	=	
R3	=	
r	=	

Powder Chamber

E	=	3.13
P1 *1)*	=	9.61
P2 *	=	9.03

Junction Cone

α *1)**	=	21°11'03"
S *	=	59.04
r1 max	=	0.60
r2	=	2.50

Collar

H1 *	=	7.62
H2 *1)*	=	7.62

Commencement of Rifling

G1 *1)**	=	7.04
G *1)*	=	15.16
α1	=	180°
h	=	
s *	=	10.00
i *1)**	=	0°59'57"
w	=	

Barrel

F *1)**	=	6.86
Z *1)*	=	7.03

Grooves

b	=	0.85	
N	=	6	
u	=	254.00	
Q	=	37.40	mm²

Dimensions in << mm >>
Dimensions and Tolerances for Proof Barrels
see Appendix CR 1.

Notes:
1) Check for safety reasons
3) Headspace on Shoulder
* Basic dimensions