C.I.P.	7-47 GS Country of Origin: IT	TAB. I Date 13-05-22 Revision

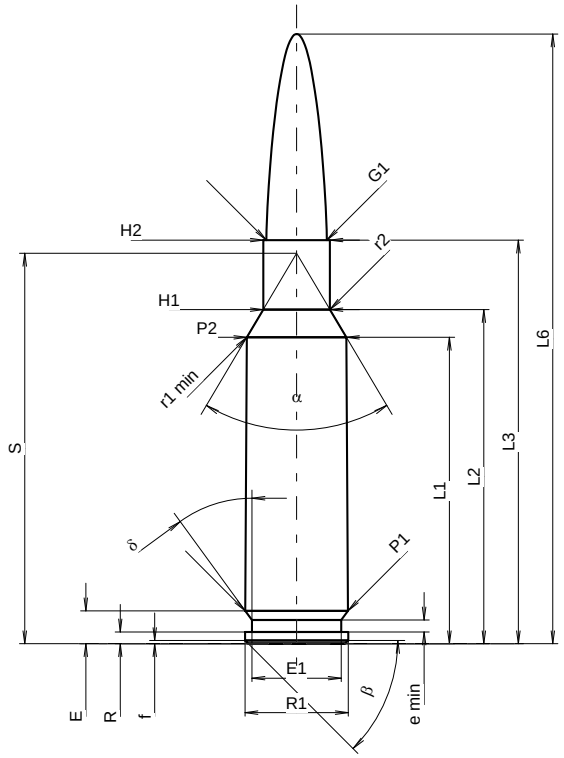

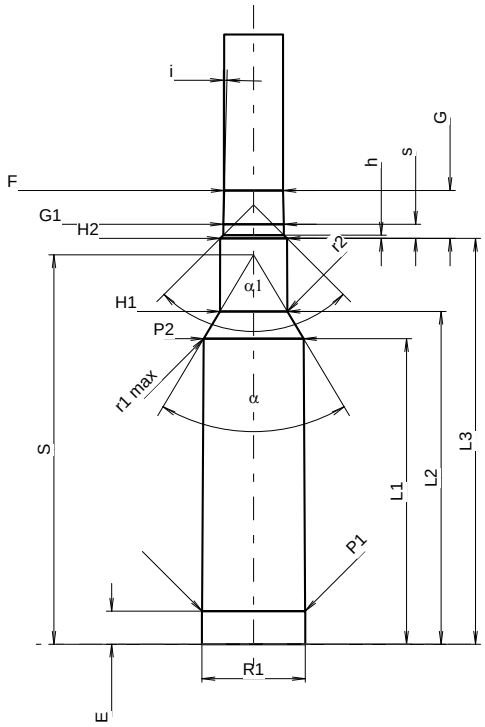

Scale 1.14:1

CARTRIDGE MAXI

Lengths

L1 1)	=	35.68	-0.20
L2 1)	=	38.90	-0.20
L3 1)	=	47.00	
L4	=		
L5	=		
L6	=	71.00	

Case Head

R	=	1.37
R1	=	12.01
R3	=	
E	=	3.84
E1	=	10.39
e min	=	1.40
δ	=	36°
f	=	0.38
β	=	45°

Powder Chamber

P1	=	11.95	
P2 1)*	=	11.59	-0.20

Junction Cone

α *	=	61°21'
S *	=	45.45
r1 min	=	1.00
r2	=	1.50

Collar

H1 *	=	7.77
H2 1)	=	7.77

Projectile

G1 *	=	7.06
G2	=	
F	=	6.86
L3+G 1)	=	52.57

Pressures (Energies)
Method Transducer

Pmax	=	4350	bar
PK	=	5003	bar
PE	=	5438	bar
M	=	25.00	
EE	=	3600	Joule

Miscellaneous Dimensions

Fe 1)3)	=	0.10
delta L	=	0.09

CHAMBER MINI

Lengths

L1	=	35.57
L2	=	38.75
L3 1)	=	47.26

Breech

R	=	
R1	=	12.04
R2	=	
R3	=	
r	=	

Powder Chamber

E	=	3.85
P1 1)	=	11.99
P2 *	=	11.63

Junction Cone

α 1)*	=	61°34'57"
S *	=	45.33
r1 max	=	0.75
r2	=	1.75

Collar

H1 *	=	7.84
H2 1)	=	7.80

Commencement of Rifling

G1 1)*	=	7.06
G	=	5.57
α1	=	90°
h	=	0.37
s *	=	1.64
i 1)*	=	1°27'27"
w	=	

Barrel

F 1)*	=	6.86
Z 1)	=	7.04

Grooves

b	=	4.06	
N	=	4	
u	=	280.00	
Q	=	38.52	mm²

Dimensions in << mm >>
Dimensions and Tolerances for Proof Barrels
see Appendix CR 1.

Notes:
1) Check for safety reasons
3) Headspace on Shoulder
* Basic dimensions