C.I.P.

6,5 x 64 Brenneke

Country of Origin: DE

TAB.	I
Date	92-02-27
Revision	13-05-22

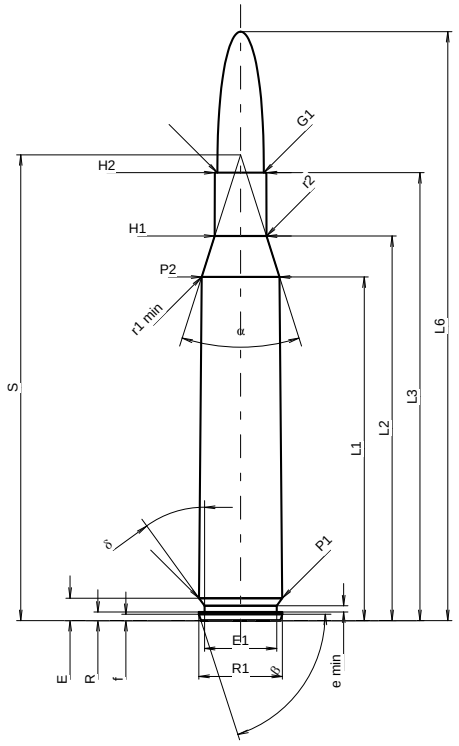

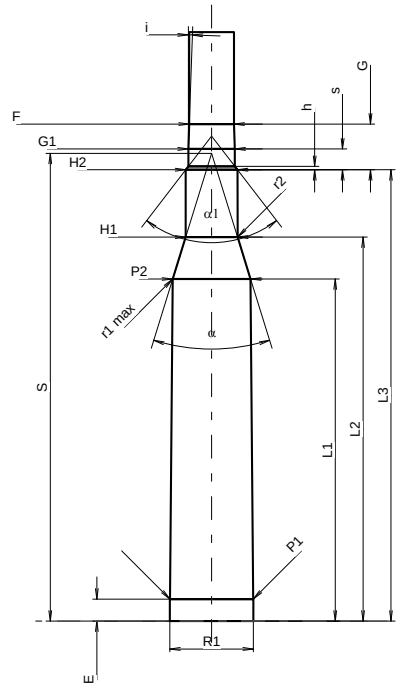

Scale 1:1.09

CARTRIDGE MAXI

Lengths

L1 1)*	=	49.50	-0.20
L2 1)*	=	55.40	-0.20
L3 1)	=	64.52	
L4	=		
L5	=		
L6	=	84.84	

Case Head

R	=	1.24
R1	=	12.01
R3	=	
E	=	3.23
E1	=	10.39
e min	=	0.90
δ	=	36°
f	=	0.91
β	=	72°

Powder Chamber

P1	=	11.97	
P2 1)*	=	11.21	-0.20

Junction Cone

α	=	35°20'54"
S	=	67.09
r1 min	=	1.02
r2	=	3.18

Collar

H1 *	=	7.45
H2 1)	=	7.42

Projectile

G1 1)	=	6.70
G2	=	
F	=	
L3+G 1)	=	71.10

Pressures (Energies)
Method Transducer

Pmax	=	4300	bar
PK	=	4945	bar
PE	=	5190	bar
M	=	25.00	
EE	=	3645	Joule

Miscellaneous Dimensions

Fe 1)3)	=	0.10
delta L	=	0.18

CHAMBER MINI

Lengths

L1 *	=	49.28
L2 *	=	55.32
L3 1)	=	65.02

Breech

R	=	
R1	=	12.04
R2	=	
R3	=	
r	=	

Powder Chamber

E	=	3.17
P1 1)	=	11.98
P2 *	=	11.23

Junction Cone

α 1)	=	34°29'30"
S	=	67.37
r1 max	=	0.76
r2	=	3.18

Collar

H1 *	=	7.48
H2 1)	=	7.45

Commencement of Rifling

G1 1)*	=	6.70
G 1)*	=	6.58
α1	=	75°
h	=	0.49
s *	=	3.00
i 1)	=	1°59'35"
w	=	

Barrel

F 1)*	=	6.45
Z 1)	=	6.70

Grooves

b	=	3.50	
N	=	4	
u	=	255.00	
Q	=	34.52	mm²

Dimensions in << mm >>
Dimensions and Tolerances for Proof Barrels
see Appendix CR 1.

Notes:
1) Check for safety reasons
3) Headspace on Shoulder
* Basic dimensions