C.I.P.

6,5 x 39

Country of Origin: RU

TAB.	I
Date	13-05-22
Revision	

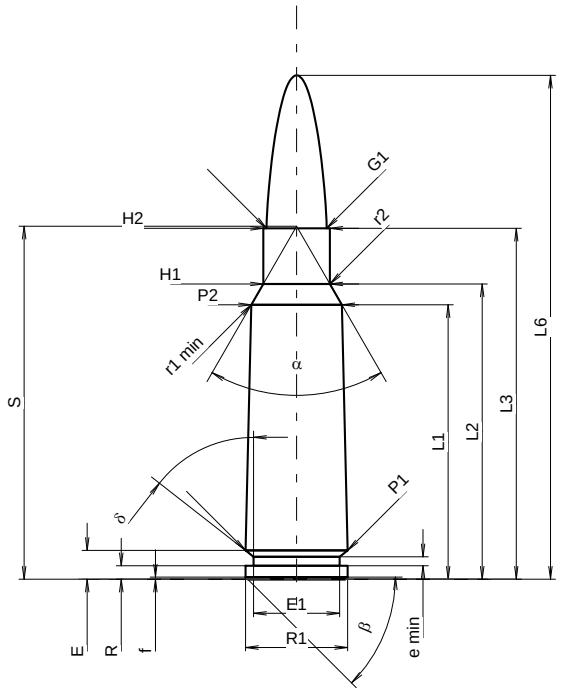

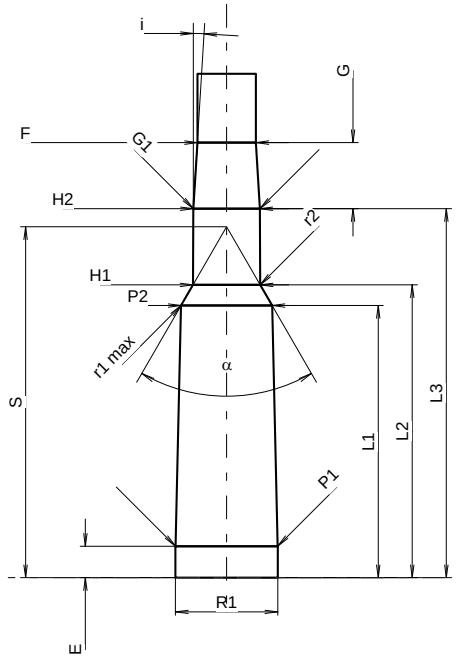

Scale 1.19:1

CARTRIDGE MAXI

Lengths

L1 *1)*	=	30.50	-0.20
L2 *1)*	=	32.81	-0.20
L3 *1)*	=	39.00	
L4	=		
L5	=		
L6	=	56.00	

Case Head

R	=	1.50	
R1	=	11.35	
R3	=		
E	=	3.20	
E1	=	9.56	
e min	=	1.00	
δ	=	52°	
f	=	0.25	
β	=	45°	

Powder Chamber

P1	=	11.35	
P2 *1)**	=	10.07	-0.20

Junction Cone

α *	=	60°	
S *	=	39.22	
r1 min	=	1.00	
r2	=	1.50	

Collar

H1 *	=	7.40	
H2 *1)*	=	7.40	

Projectile

G1 *1)*	=	6.70	
G2	=		
F	=		
L3+G *1)*	=	46.35	

Pressures (Energies)
Method Transducer

Pmax	=	4100	bar
PK	=	4715	bar
PE	=	5125	bar
M	=	25.00	
EE	=	2500	Joule

Miscellaneous Dimensions

Fe *1)3)*	=	0.10	
delta L	=	0.22	

CHAMBER MINI

Lengths

L1	=	30.24	
L2	=	32.54	
L3 *1)*	=	41.00	

Breech

R	=	1.50	
R1	=	11.37	
R2	=		
R3	=		
r	=		

Powder Chamber

E	=	3.50	
P1 *1)*	=	11.36	
P2 *	=	10.12	

Junction Cone

α *1)**	=	60°	
S *	=	39.00	
r1 max	=	0.50	
r2	=	1.50	

Collar

H1 *	=	7.46	
H2 *1)*	=	7.40	

Commencement of Rifling

G1 *1)**	=	7.40	
G *1)*	=	7.35	
α1	=		
h	=		
s	=		
i *1)**	=	3°30'12"	
w	=		

Barrel

F *1)**	=	6.50	
Z *1)*	=	6.70	

Grooves

b	=	2.50	
N	=	4	
u	=	250.00	
Q	=	34.21	mm²

Dimensions in << mm >>
Dimensions and Tolerances for Proof Barrels
see Appendix CR 1.

Notes:
1) Check for safety reasons
3) Headspace on Shoulder
* Basic dimensions