C.I.P.	6,5 mm Lahoz Country of Origin: FR	TAB. I Date 11-05-25 Revision

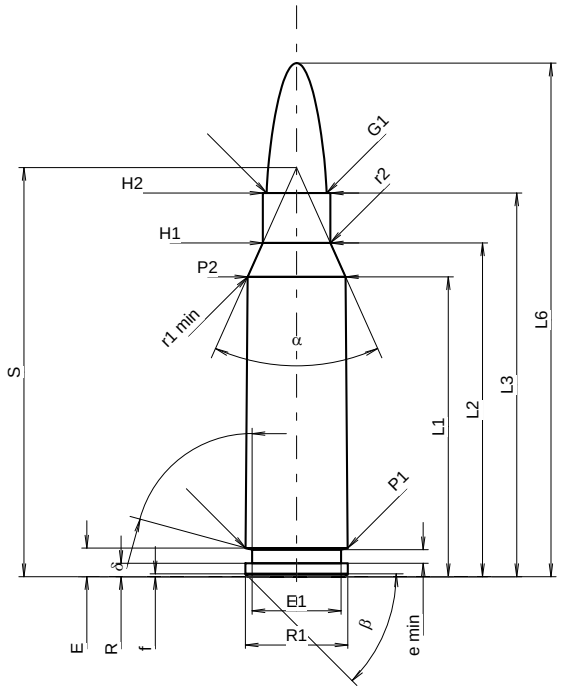

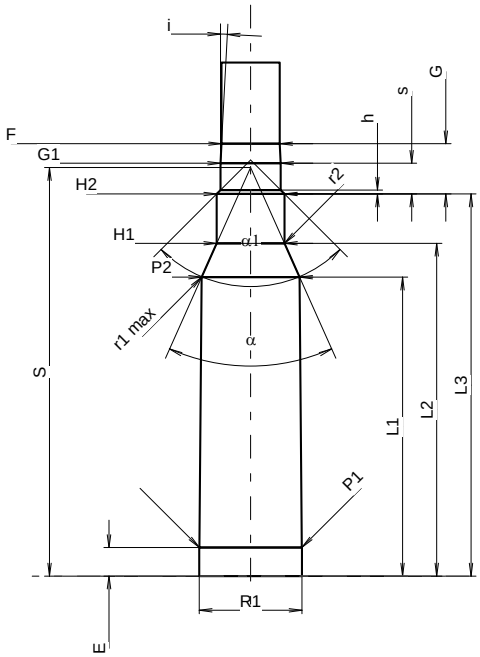

Scale 1.18:1

CARTRIDGE MAXI

Lengths

L1 1)	=	33.52	-0.20
L2 1)	=	37.30	-0.20
L3 1)	=	42.87	
L4	=		
L5	=		
L6	=	57.40	

Case Head

R	=	1.50
R1	=	11.45
R3	=	
E	=	3.20
E1	=	9.95
e min	=	1.50
δ	=	74°40'48"
f	=	0.30
β	=	45°

Powder Chamber

P1	=	11.41	
P2 1)*	=	10.94	-0.20

Junction Cone

α *	=	48°18'15"
S *	=	45.72
r1 min	=	3.00
r2	=	2.00

Collar

H1 *	=	7.55
H2 1)	=	7.55

Projectile

G1 1)*	=	6.71
G2	=	
F	=	
L3+G 1)	=	48.49

Pressures (Energies)
Method Transducer

Pmax	=	3450	bar
PK	=	3968	bar
PE	=	4313	bar
M	=	25.00	
EE	=	2010	Joule

Miscellaneous Dimensions

Fe 1)3)	=	0.15
delta L	=	0.14

CHAMBER MINI

Lengths

L1	=	33.42
L2	=	37.20
L3 1)	=	42.72

Breech

R	=	
R1	=	11.47
R2	=	
R3	=	
r	=	

Powder Chamber

E	=	3.20
P1 1)	=	11.46
P2 *	=	10.95

Junction Cone

α 1)*	=	48°10'40"
S *	=	45.67
r1 max	=	3.00
r2	=	2.00

Collar

H1 *	=	7.57
H2 1)	=	7.57

Commencement of Rifling

G1 1)*	=	6.73
G 1)	=	5.62
α1	=	90°
h	=	0.42
s	=	3.43
i 1)*	=	3°
w	=	

Barrel

F 1)*	=	6.50
Z 1)	=	6.70

Grooves

b	=	2.42	
N	=	6	
u	=	228.60	
Q	=	34.67	mm²

Dimensions in << mm >>
Dimensions and Tolerances for Proof Barrels
see Appendix CR 1.

Notes:
1) Check for safety reasons
3) Headspace on Shoulder
* Basic dimensions